TEST REPORT

SCOPE OF WORK
COMMISSION REGULATION (EU) No 617/2013 (ErP Lot 3)

PRODUCT/MODEL
Notebook /GM7PG3M,GM7PG5M

DESCRIPTION OF REGULATION
COMMISSION REGULATION (EU) No 617/2013 (ErP Lot 3) of 26 June 2013 implementing Directive 2009/125/EC of the European Parliament and of the Council with regard to ecodesign requirements for computers and computer servers

DESCRIPTION OF TEST METHODS AND STANDARDS
EN 62623:2013 Desktop and notebook computers - Measurement of energy consumption

SAMPLE #	SERIEL #	DATE	CONDITION
		2023/3/7	--

Page1-5: ErP Report from safety

1. General Information:

1. Applicant/address:	TONGFANG HONGKONG (SUZHOU) LIMITED NO. 10 Plant, Jianwu Phase III, Western Zone, Comprehensive Bonded Zone, NO.200, Suhong Middle Road, Suzhou Industrial Park
2. Model name:	GM7PG5M

3. Year of Manufacture: 2023

2. General Technical Information:

1.	Manufacturer/address:	Same as applicant
2.	Product type	☐Desktop ☐All In One Tablet ☒Notebook ☐Workstation
3.	Operating system:	Windows 11
3.	Central processing unit:	Intel Core I7-13700H, 2.4GHz, 14cores
4.	Diagonal screen size	17. 3 (inch)
5.	Installed system memory:	16G*2
6.	Internal storage:	1T *2
7.	Discrete graphics card:	☒Yes ☐No
8.	Category:	Category C
9.	External power supply:	CCY/ A17-230P1A

3. General Technical Information:

1.	Test laboratory and Address	TONGFANG HONGKONG (SUZHOU) LIMITED NO. 10 Plant, Jianwu Phase III, Western Zone, Comprehensive Bonded Zone, NO.200, Suhong Middle Road, Suzhou Industrial Park
2.	Voltage/Freq. of power supply	230 Vac/50 Hz
3.	Ambient temp. (°C)	24
4.	Humidity (%)	55
5.	Air Speed Close to the UUT: (m/s)	0.1

4. Equipment list:

Reg. No.	Equipment Name	Brand Name	Type / Model	Cal. Date	Next Cal.
CCC061	Thermo-Hygrograph	ISUZU	TH-27R	06/03/2022	06/02/2023
CCC078	Digital Power Meter	Yokogawa	WT310E	03/11/2022	03/10/2023
CCC039	Timer	E-MORE	CM-173	04/22/2022	04/21/2023
CCCN0029	AC Power Source	APE	AFW-150AY	03/09/2022	03/08/2023

5. Test result (Intel Core I7-13700H, 2.4GHz, 14cores):

Sleep Mode Test Result (WOL Enable):

1.	Tested at:	230 Vac / 50 Hz
2.	The Average power (W)	--

Sleep Mode Test Result (WOL Disable):

1.	Tested at:	230 Vac / 50 Hz
2.	The Average power (W)	2.356

OFF Mode Test Result (WOL Enable):

1.	Tested at:	230 Vac / 50 Hz
2.	The Average power (W)	--

OFF Mode Test Result (WOL Disable):

3.	Tested at:	230 Vac / 50 Hz
4.	The Average power (W)	0.407

Idle state Test Result:

1.	Tested at:	230 Vac / 50 Hz
2.	The Average power (W)	6.874

TEC Calculation (E_{TEC}) for Notebook computers:

The annual total energy consumption (E_{TEC}) shall be determined using the following formula:

E_{TEC} = (8760/1000)*(0.60*P_{off} + 0.10*P_{sleep} + 0.30*P_{idle}) =22. 268 (kWh/y)

Ecodesign requirement:

The annual total energy consumption (E_{TEC} in kWh/year) shall not exceed:

(a) Category A computer: 27.00.
(b) Category B computer: 36.00.
(c) Category C computer: 60.50.

The following capability adjustments apply:

(a) memory: 0,4 kWh/year per GB over base, where base memory is 4 GB.
(b) additional internal storage: 3 kWh/year.
(c) discrete television tuner: 2.1kWh/year.
(d) discrete graphics card (dGfx) (for the first and each additional discrete graphics card (dGfx))discrete graphics card (dGfx) for the first and each additional discrete graphics card (dGfx):

	dGfx category	TEC allowance (kWh/year)
First discrete graphics card (dGfx)	G1	7
	G2	11
	G3	13
	G4	20
	G5	27
	G6	33
	G7	61
Each additional discrete graphics card (dGfx)	G1	4
	G2	6
	G3	8
	G4	12
	G5	16
	G6	20
	G7	36

E_{TEC_MAX} = 60.50+0.4*(32-4)+3+61 = 135.7 kWh/year

Test Summary:
When tested at 230 Vac, 50 Hz:

Ecodesign requirement:
E_{TEC_MAX} = **135.7** kWh/year

TEC Calculation (E_{TEC}) for Notebook computers (Intel Core I7-13700H, 2.4GHz, 14cores):
E_{TEC} = 22.268kWh/year

Summary:

IntelCoreI7-13700H, 2.4GHz, 14cores	E_{TEC}	Sleep Mode (W)		Off Mode (W)		Idle
		WOL Enable	WOL Disable	WOL Enable	WOL Disable	
Requirement	135.7	--	3	--	1	N/A
Result	22.268	--	2.356	--	0.407	6.874
The measurements of P_{off}, P_{sleep} and P_{idle} for calculation of E_{TEC} of notebook computers are refer to EN 62623:2013						

The test result of UUT complies with the limits of COMMISSION REGULATION (EU) No 617/2013 (ErP Lot 3)

Verdict	**Pass**

The results only relate to the item tested

Page5-7: Power Consumption from Power/PM/EE

I. Power Consumption

1. Sleep mode with WOL enabled power demand (Watts)

Model	GM7PG5M
Watts	2.44

2. Off mode with WOL enabled power demand (Watts)

Model	GM7PG5M
Watts	0.4

3. Internal power supply efficiency at 10 %, 20 %, 50 % and 100 % of rated output power

80%

4. External Power Supply Efficiency

Efficiency

1. Specification:

1-1

DOE(Level VI):

(1)115Vac / 0A load ≦0.21W

(2)115Vac / 25%,50%,75%,100% load ≧88%

(Average Active Mode Efficiency ,Warm up 30 minutes later，DC Cable≦1200 mm,14AWG)

Erp(Tier 2):

(1)230Vac / 0A load ≦0.21W

(2)230Vac / 25%,50%,75%,100% load ≧88%

(Average Active Mode Efficiency ,Warm up 30 minutes later，DC Cable≦1200 mm,14AWG)

1-2

Efficiency: (Warm up 10minutes later)

100Vac @ 11.8A load, Efficiency ≧89%

240Vac @ 11.8A load, Efficiency ≧91%

2. Test condition:

Input: 100Vac/60Hz; 115Vac/60Hz; 230Vac/50Hz; 240Vac/50Hz

Ambient Temperature: 25℃

Load	+19.5V
No load	0A
10%	1.18A
25%	2.95A
50%	5.9A
75%	8.85A
Max	11.8A

3. Test record:

Load	Vin (Vac)	Iinrms (A)	Pin (W)	Pout (W)	PF	Eff (%)	Spec (%)	Result
Max	100.050	2.465	244.160	225.174	0.990	92.224	>89	PASS
	239.790	1.054	241.336	225.186	0.955	93.308	>91	PASS

	115V/60Hz					
	No load	Active power values				
Load	0%	10%	25%	50%	75%	100%
Iout (A)	--	1.18	2.95	5.91	8.86	11.81
Vout (V)		19.51	19.46	19.37	19.27	19.17
Pout (W)		23.10	57.50	114.41	170.72	226.44
Fin (Hz)	60	60	60	60	60	60
Iin (A)	0.02	0.26	0.57	1.12	1.65	2.18
Vin (V)	115.46	115.39	115.29	115.11	115.03	114.85
Pin (W)	0.07	27.03	62.86	123.56	184.98	247.73
THDv (%)	0.08	0.06	0.06	0.22	0.19	0.11
PF (W/VA)	0.03	0.92	0.96	0.95	0.98	0.99
Power Consumed (W)	0.07	3.93	5.36	9.15	14.26	21.29
Efficiency	--	85.5%	91.5%	92.6%	92.3%	91.4%
Average Efficiency	--	--	91.94%			

	230V/50Hz					
	No load	Active power values				
Load	0%	10%	25%	50%	75%	100%
Iout (A)	--	1.18	2.95	5.91	8.86	11.81
Vout (V)		19.52	19.46	19.37	19.28	19.18
Pout (W)		23.10	57.50	114.45	170.81	226.57
Fin (Hz)	50	50	50	50	50	50
Iin (A)	0.03	0.16	0.31	0.58	0.85	1.11
Vin (V)	230.40	230.37	230.32	230.24	230.15	230.06
Pin (W)	0.08	28.31	63.84	123.62	183.51	244.07
THDv (%)	0.14	0.11	0.17	0.13	0.06	0.18
PF (W/VA)	0.01	0.76	0.89	0.93	0.94	0.96
Power Consumed (W)	0.08	5.21	6.33	9.17	12.70	17.49
Efficiency	--	81.6%	90.1%	92.6%	93.1%	92.8%
Average Efficiency	--	--	92.14%			

5. Minimum number of loading cycles that the batteries can withstand (applies only to notebook computers):

500 Cycles

6. User information on the energy-saving potential of power management

functionality

https://www.energystar.gov/products/low_carbon_it_campaign/power_management_computer

Page8-13: Noise Level Report from PT

Noise Levels (the declared A-weighted **sound pressure** level) of the computer

***The data of this section (Noise level) can be applied to GM7PG5M

GM7PG5M I5-13500H

1. Samples Configuration:

Configuration:	Brand/Frequency/Capacity/Description
P/N	NA
Main Board Version	VB
Windows version	Windows11
BIOS/EC Version	B.0.07/ 0.21.00
CPU	INTEL Core i5 -13500H
Memory	D4,3200,16G,1G*8,M471A2K43DB1-CWE,SS
VGA	GeForce RTX 3050
Storage/ HDD	N/A
SSD	SSD, PCIe*4,1TB,IM2P33F8-001TD,Adata
Wi-Fi	WLAN+BT,2*2,2P ,2230E,AX201.NGWGNVW,INTEL
ADAPTER	150 Watts ADP

2. Test Equipment:

2-1 Semi-Anechoic Chamber: Acoustic testing for system sound pressure/ quality shall be testing in a qualified Semi-anechoic chamber meeting the requirements of ISO-3744.

2-2 Microphone: Follow ISO-3744

3. Test Condition

3-1 Environment Temperature: 23+-2degC

4. Test Standard Reference

4-1 Sound pressure standard: follow ISO7779-chapter 8.6.3-C
4-2 It is 25cm away from test machine for four edges.
4-3 Show as below picture.

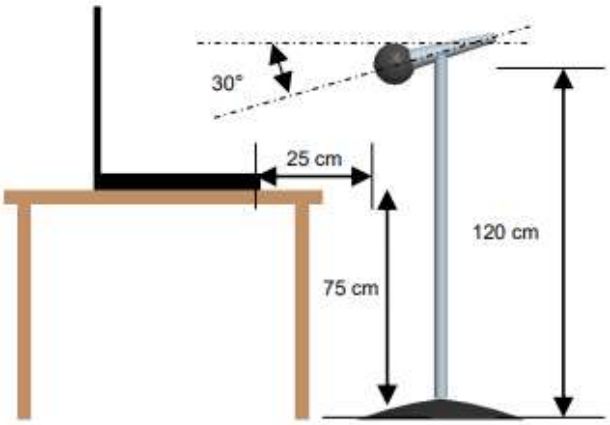

4-4.For B phase test, we determine the fan RPM to meet THTF acoustic SPEC in front side sound pressure.

4-5.Sound pressure SPEC

NB	Front(dBA)SPEC
Turbo mode	46
Gaming mode	42
Office mode	35

5. Acoustic test report

Sound pressure

Semi-Anechoic Chamber	MiTAC	
	Front(dBA)	SPEC
Turbo mode	45.7	46
Gaming mode	42	42
Office mode	34.9	35

6. Conclusion:

- Sound pressure:
  Turbo mode test is under spec.
  Gaming mode test is under spec.
  Office mode test is under spec.

GM7PG5M I7-13700H

1. Samples Configuration:

Configuration:	Brand/Frequency/Capacity/Description
P/N	NA
Main Board Version	VB
Windows version	Windows11
BIOS/EC Version	B.0.07/ 0.21.00
CPU	INTEL Core i7 -13700H
Memory	D4,3200,16G,1G*8,M471A2K43DB1-CWE,SS
VGA	GeForce RTX 4050
Storage/ HDD	N/A
SSD	SSD, PCIe*4,1TB,IM2P33F8-001TD,Adata
Wi-Fi	WLAN+BT,2*2,2P ,2230E,AX201.NGWGNVW,INTEL
ADAPTER	230 Watts ADP

2. Test Equipment:

2-1 Semi-Anechoic Chamber: Acoustic testing for system sound pressure/ quality shall be testing in a qualified Semi-anechoic chamber meeting the requirements of ISO-3744.

2-2 Microphone: Follow ISO-3744

3. Test Condition

3-1 Environment Temperature: 23+-2degC

4. Test Standard Reference

4-1 Sound pressure standard: follow ISO7779-chapter 8.6.3-C
4-2 It is 25cm away from test machine for four edges.
4-3 Show as below picture.

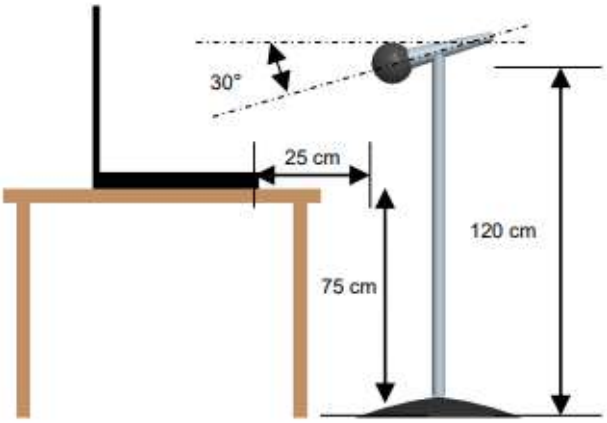

4-4.For B phase test, we determine the fan RPM to meet THTF acoustic SPEC in front side sound pressure.

4-5.Sound pressure SPEC

NB	Front(dBA)SPEC
Turbo mode	46
Gaming mode	42
Office mode	35

5. Acoustic test report

Sound pressure

Semi-Anechoic Chamber	MiTAC	
	Front(dBA)	SPEC
Turbo mode	45.7	46
Gaming mode	42	42
Office mode	34.9	35

6. Conclusion:

- Sound pressure:
  Turbo mode test is under spec.
  Gaming mode test is under spec.
  Office mode test is under spec.

Page14-15: MS OS Setting Description from FAE Huaizhi

1.	Description of how enter Sleep /OFF mode have to be select or programmed;	The sleep or Off mode was selected or be programmed by operating system power management function.
2.	Step about how to acquiring a stable system experience	Plug in power supplier (adapter) and press power button to turn on system
3.	Events of users require the equipment automatically goes into to SLEEP /OFF mode;	The power management function allow the system automatically switching from idle mode to sleep mode , etc: after a period of user's action(idle-> screen off ->sleep).
4.	During an idle period before the computer automatically reaches sleep mode, or another condition which does not exceed the applicable power demand requirements for sleep mode;	The system for a period that no user or network activity (base on user power management settings). Path: Control Panel\Hardware and Sound\Power Options\Edit Plan Settings"
5.	For a period of time that Admin/users are not activity ,the computer automatically enter power saving mode that has a lower power demand requirement than sleep mode;	The system for a period no user or network activity (base on user power management settings) user power management settings:" Control Panel\Hardware and Sound\Power Options\Edit Plan Settings"
6.	The length of time before the display sleep mode is set to activate after user inactivity;	If there is no user or network activity, the time stay in OS can be set , such as "1 minutes" ,"2 minutes" ..."never" Path: Control Panel\Hardware and Sound\Power Options\Edit Plan Settings,
7.	How to implete the MS function;	User power management settings:" Control Panel\Hardware and Sound\Power Options\Choose what the power button do" or default Press the shortcut key (Fn+F1) to enter sleep mode

*If a notebook computer is operated by battery/ies that cannot be accessed and replaced by a non-professional user, in addition to the information specified in point 7.1 of Regulation 617/2013/EU, manufacturers shall provide in the technical documentation, and make available on free-access websites and on the external packaging of the notebook computer, the following information.

**"The battery[ies] in this product cannot be easily replaced by users themselves.

Signed by .....

Evelyn

TONGFANG HONGKONG LIMITED